POLAR ICE COOLING

SNKESTR F 30000 P

SNKES SERİSİ / SNKES SERIES

DIŞ ÜNİTE (KONDENSER) ÖLÇÜLER / OUTDOOR UNIT (CONDENSER) DIMENSIONS							
L	L1	H	H1	W	W1	W2	W3
3000	0	1349	1262	800	784	844	846

İÇ ÜNİTE (EVAPARATÖR) ÖLÇÜLER / INDOOR UNIT (EVAPORATOR) DIMENSIONS							
L	L1	H	H1	W	W1	W2	W3
2300	1980	788	725	546	480	417	366

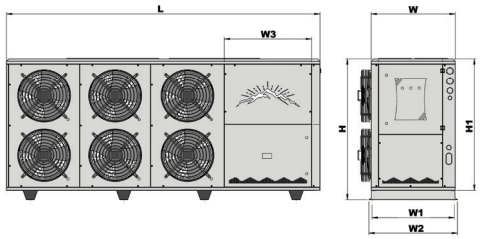

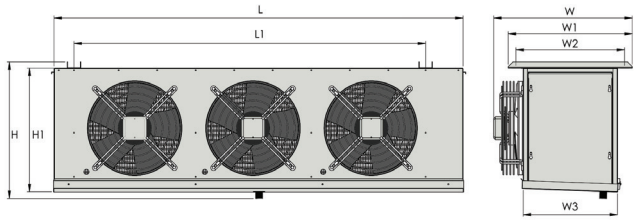

DIŞ ÜNİTE / OUTDOOR UNIT	= 556 KG	**İÇ ÜNİTENİN DRENAJ** / INDOOR UNIT DRAIN Ø = 33 mm	= 170 KG

KOMPRESÖR-KONDENSER-EVAPARATÖR BİLGİLERİ / COMPRESSOR - CONDENSER - EVAPORATOR INFORMATION

DIŞ ÜNİTE (KONDENSER)		KOMPRESÖR / COMPRESSOR		İÇ ÜNİTE (EVAPARATÖR)	
MARKA / BRAND	EWEREST 30-100	**MARKA** / BRAND	FRASCOLD	**MODEL** / MODEL	TEA50 134 6
ADET / QUANTITY	1	**MODEL** / MODEL	V 30-84 Y	**ADET** / QUANTITY	2
FAN ADET / NUMBER OF FANS	6	**GÜÇ** / POWER	30 HP	**FAN ADET** / NUMBER OF FANS	3
FAN ÇAPI / FAN DIAMETER (mm)	500	**TİPİ** / TYPE	YARI HERMETİK	**FAN ÇAPI** / FAN DIAMETER (mm)	500
KAPASİTE / CAPACITY (kW)	100	**NOMİNAL AKIM** / NOMINAL CURRENT		**KAPASİTE** / CAPACITY (kW)	20.09
YÜZEY ALANI / SURFACE AREA (m^2)	257	**BAĞLANTI ÖLÇÜLERİ** / CONNECTION DIMENSIONS (m^2)	7/8 - 2 1/8	**YÜZEY ALANI** / SURFACE AREA (m^2)	57.95

ÜRÜN / PRODUCT	ECO	PLS
GAZ DEPOSU / GAS RECEIVER	✓	✓
YAĞ AYIRICI / OIL SEPARATOR	×	×
LİKİT TUTUCU / LIQUID RECEIVER	×	×
MANOMETRE / PRESSURE GAUGE	×	✓
Y.B. SWİTCHİ / HIGH PRESSURE SWITCH	✓	×
KOMBİNE / COMBINATION UNIT	×	✓
GÖZELTME CAMI / SIGHT GLASS	✓	✓
SELENOİD / SOLENOID VALVE	×	✓
TİTREŞİM / VIBRATION ISOLATOR	✓	✓
DRAYER / DRYER	✓	✓
DİJİTAL / DIGITAL	✓	✓
ELEKTRİK PANOSU / ELECTRICAL PANEL	✓	✓
KAPİLER / CAPILLARY TUBE	×	✓

AKIŞ DİYAGRAMI TEMSİLİ GÖRSEL OLARAK KOYULMUŞTUR.
THE FLOW DIAGRAM HAS BEEN PRESENTED AS A REPRESENTATIVE VISUAL.

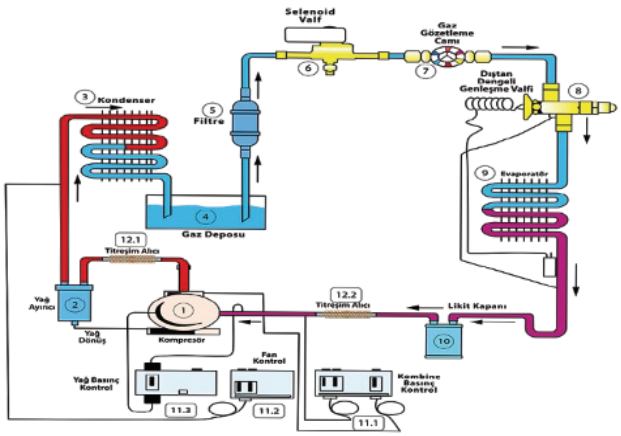

KOMPRESÖR KAPASİTESİ COMPRESSOR CAPACITY	R 404 A				R 449 A			
TO / TC / TO / TC (°C)	0/+45	0/+50	-10/+45	-10/+50	0/+45	0/+50	-10/+45	-10/+50
SOĞUTMA KAP. / COOLING CAPACITY (kW)	62.65	56.49	42.16	37.82	62.65	56.49	42.16	37.82
ÇEKİLEN GÜÇ / POWER CONSUMPTION (kW)	22.05	23.34	19.08	19.92	22.05	23.34	19.08	19.92
COP / COP (w/w)	2.84	2.42	2.21	1.90	2.84	2.42	2.21	1.90