POLAR ICE COOLING

SNKCTR E 600 P

SNKCTR SERİSİ / SNKCTR SERIES

DIŞ ÜNİTE (KONDENSER) ÖLÇÜLER / OUTDOOR UNIT (CONDENSER) DIMENSIONS							
L	L1	H	H1	W	W1	W2	W3
1300	0	1258	1231	400	420	435	601

İÇ ÜNİTE (EVAPARATÖR) ÖLÇÜLER / INDOOR UNIT (EVAPORATOR) DIMENSIONS							
L	L1	H	H1	W	W1	W2	W3
1650	1330	788	725	541	480	417	366

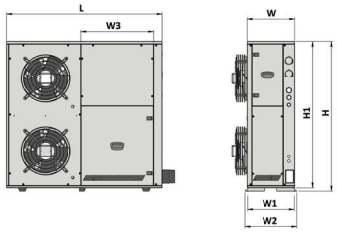

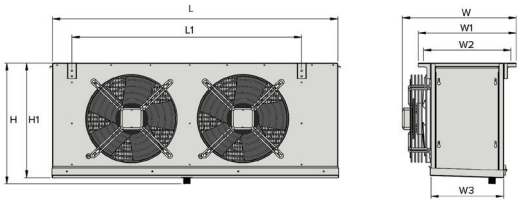

DIŞ ÜNİTE / OUTDOOR UNIT	= 75 KG
İÇ ÜNİTENİN DRENAJ / INDOOR UNIT DRAIN Ø = 33 mm	= 25 KG

KOMPRESÖR-KONDENSER-EVAPARATÖR BİLGİLERİ / COMPRESSOR - CONDENSER - EVAPORATOR INFORMATION

DIŞ ÜNİTE (KONDENSER)		KOMPRESÖR / COMPRESSOR		İÇ ÜNİTE (EVAPARATÖR)	
MARKA / BRAND	SNOWBOX 700	MARKA / BRAND	EMBRACO	MODEL / MODEL	TEA45 123 6
ADET / QUANTITY	1	MODEL / MODEL	SE 6043 GS	ADET / QUANTITY	1
FAN ADET / NUMBER OF FANS	2	GÜÇ / POWER	6 HP	FAN ADET / NUMBER OF FANS	2
FAN ÇAPI / FAN DIAMETER (mm)	500	TİPİ / TYPE	SCROLL	FAN ÇAPI / FAN DIAMETER (mm)	450
KAPASİTE / CAPACITY (kW)	26	NOMİNAL AKIM / NOMINAL CURRENT	-----	KAPASİTE / CAPACITY (kW)	9.16
YÜZEY ALANI / SURFACE AREA (m^2)	52	BAĞLANTI ÖLÇÜLERİ / CONNECTION DIMENSIONS (m^2)	1/2 - 7/8	YÜZEY ALANI / SURFACE AREA (m^2)	28,97

ÜRÜN / PRODUCT	ECO	PLS
GAZ DEPOSU / GAS RECEIVER	✓	✓
YAĞ AYIRICI / OIL SEPARATOR	×	×
LİKİT TUTUCU / LIQUID RECEIVER	×	×
MANOMETRE / PRESSURE GAUGE	×	✓
Y.B. SWİTCHİ / HIGH PRESSURE SWITCH	✓	×
KOMBİNE / COMBINATION UNIT	×	✓
GÖZELTME CAMI / SIGHT GLASS	✓	✓
SELENOİD / SOLENOID VALVE	×	✓
TİTREŞİM / VIBRATION ISOLATOR	✓	✓
DRAYER / DRYER	✓	✓
DİJİTAL / DIGITAL	✓	✓
ELEKTRİK PANOSU / ELECTRICAL PANEL	✓	✓
KAPİLER / CAPILLARY TUBE	×	✓

AKIŞ DİYAGRAMI TEMSİLİ GÖRSEL OLARAK KOYULMUŞTUR.
THE FLOW DIAGRAM HAS BEEN PRESENTED AS A REPRESENTATIVE VISUAL.

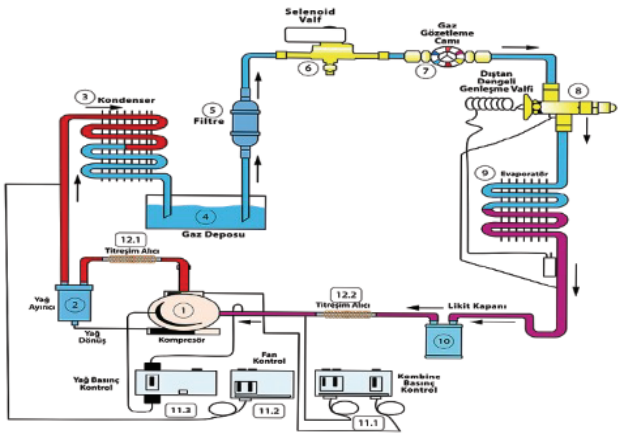

KOMPRESÖR KAPASİTESİ COMPRESSOR CAPACITY	R 404 A				R 449 A			
TO / TC / TO / TC (°C)	0/+45	0/+55	-10/+45	-10/+55	0/+45	0/+55	-10/+45	-10/+55
SOĞUTMA KAP. / COOLING CAPACITY (kW)	14.87	12.29	10.46	8.68	14.77	12.19	10.36	8.58
ÇEKİLEN GÜÇ / POWER CONSUMPTION (kW)	5.00	5.94	4.62	5.51	4.96	5.84	4.52	5.41
COP / COP (w/w)	2.97	2.07	2.26	1.57	2.97	2.07	2.26	1.57