POLAR ICE COOLING

SNKESTR F 5000 P

SNKES SERİSİ / SNKES SERIES

DIŞ ÜNİTE (KONDENSER) ÖLÇÜLER / OUTDOOR UNIT (CONDENSER) DIMENSIONS							
L	L1	H	H1	W	W1	W2	W3
1450	0	1259	1231	500	521	535	751

İÇ ÜNİTE (EVAPARATÖR) ÖLÇÜLER / INDOOR UNIT (EVAPORATOR) DIMENSIONS							
L	L1	H	H1	W	W1	W2	W3
1650	1330	788	725	541	480	417	366

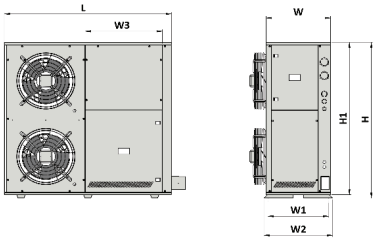

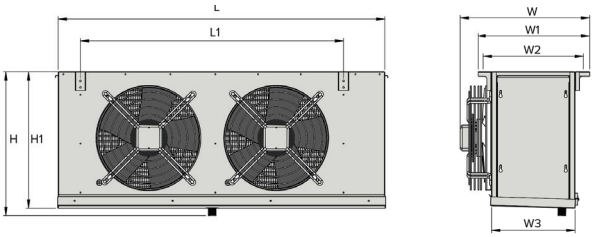

DIŞ ÜNİTE / OUTDOOR UNIT	= 207 kg	**İÇ ÜNİTENİN DRENAJ** / INDOOR UNIT DRAIN Ø = 33 mm	= 70 kg

KOMPRESÖR-KONDENSER-EVAPARATÖR BİLGİLERİ / COMPRESSOR - CONDENSER - EVAPORATOR INFORMATION

DIŞ ÜNİTE (KONDENSER)		KOMPRESÖR / COMPRESSOR		İÇ ÜNİTE (EVAPARATÖR)	
MARKA / BRAND	SNOEBOX 9-7	**MARKA** / BRAND	FRASCOLD	**MODEL** / MODEL	TEA45 124 6
ADET / QUANTITY	1	**MODEL** / MODEL	Q5-24.1Y	**ADET** / QUANTITY	1
FAN ADET / NUMBER OF FANS	2	**GÜÇ** / POWER	5 HP	**FAN ADET** / NUMBER OF FANS	2
FAN ÇAPI / FAN DIAMETER (mm)	500	**TİPİ** / TYPE	YARI HERMETİK	**FAN ÇAPI** / FAN DIAMETER (mm)	450
KAPASİTE / CAPACITY (kW)	26	**NOMİNAL AKIM** / NOMINAL CURRENT	-----	**KAPASİTE** / CAPACITY (kW)	11.22
YÜZEY ALANI / SURFACE AREA (m^2)	52	**BAĞLANTI ÖLÇÜLERİ** / CONNECTION DIMENSIONS (m^2)	1/2-1 1/8	**YÜZEY ALANI** / SURFACE AREA (m^2)	38.43

ÜRÜN / PRODUCT	ECO	PLS
GAZ DEPOSU / GAS RECEIVER	✓	✓
YAĞ AYIRICI / OIL SEPARATOR	×	×
LİKİT TUTUCU / LIQUID RECEIVER	×	×
MANOMETRE / PRESSURE GAUGE	×	✓
Y.B. SWİTCHİ / HIGH PRESSURE SWITCH	✓	×
KOMBİNE / COMBINATION UNIT	×	✓
GÖZELTME CAMI / SIGHT GLASS	✓	✓
SELENOİD / SOLENOID VALVE	×	✓
TİTREŞİM / VIBRATION ISOLATOR	✓	✓
DRAYER / DRYER	✓	✓
DİJİTAL / DIGITAL	✓	✓
ELEKTRİK PANOSU / ELECTRICAL PANEL	✓	✓
KAPİLER / CAPILLARY TUBE	×	✓

AKIŞ DİYAGRAMI TEMSİLİ GÖRSEL OLARAK KOYULMUŞTUR.
THE FLOW DIAGRAM HAS BEEN PRESENTED AS A REPRESENTATIVE VISUAL.

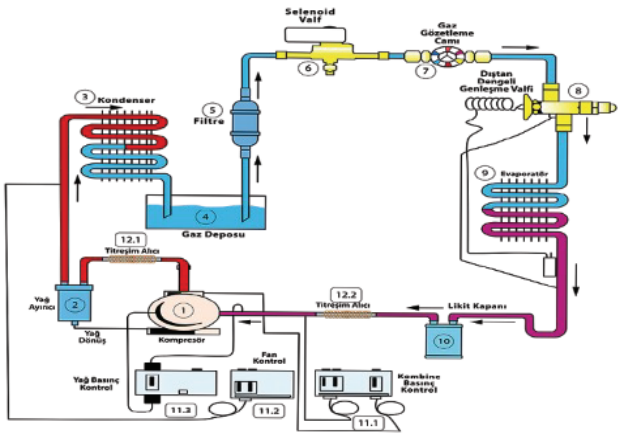

KOMPRESÖR KAPASİTESİ COMPRESSOR CAPACITY	R 404 A				R 449 A			
TO / TC / TO / TC (°C)	0/+45	0/+50	-10/+45	-10/+50	0/+45	0/+50	-10/+45	-10/+50
SOĞUTMA KAP. / COOLING CAPACITY (kW)	17.25	15.42	11.54	10.29	17.74	16.28	11.51	10.48
ÇEKİLEN GÜÇ / POWER CONSUMPTION (kW)	6.27	6.67	5.40	5.66	5.76	6.12	4.91	5.14
COP / COP (w/w)	2.75	2.31	2.14	1.82	3.08	2.66	2.34	9.21