DIŞ ÜNİTE (KONDENSER) ÖLÇÜLER / OUTDOOR UNIT (CONDENSER) DIMENSIONS							
L	L1	H	H1	W	W1	W2	W3
2180	-----	1349	1262	800	784	844	876

İÇ ÜNİTE (EVAPARATÖR) ÖLÇÜLER / INDOOR UNIT (EVAPORATOR) DIMENSIONS							
L	L1	H	H1	W	W1	W2	W3
3350	3030	871	808	621	555	492	441

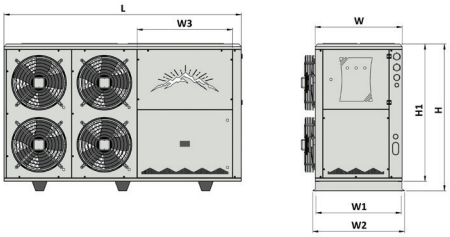

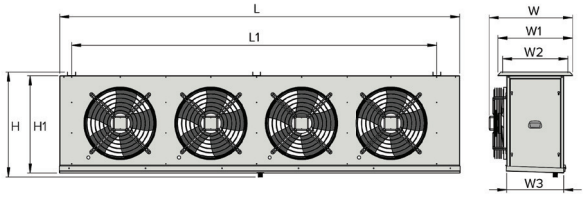

DIŞ ÜNİTE / OUTDOOR UNIT	**= 519 kg**

İÇ ÜNİTENİN DRENAJ / INDOOR UNIT DRAIN Ø = 33 mm	**= 220 kg**

KOMPRESÖR-KONDENSER-EVAPARATÖR BİLGİLERİ / COMPRESSOR - CONDENSER - EVAPORATOR INFORMATION

DIŞ ÜNİTE (KONDENSER)		KOMPRESÖR / COMPRESSOR		İÇ ÜNİTE (EVAPARATÖR)	
MARKA / BRAND	EWEREST 10-63	**MARKA** / BRAND	FRASCOLD	**MODEL** / MODEL	TEA50 145 8 T2
ADET / QUANTITY	1	**MODEL** / MODEL	V 25 103 Y	**ADET** / QUANTITY	1
FAN ADET / NUMBER OF FANS	4	**GÜÇ** / POWER	25 HP	**FAN ADET** / NUMBER OF FANS	4
FAN ÇAPI / FAN DIAMETER (mm)	500	**TİPİ** / TYPE	YARI HERMETİK	**FAN ÇAPI** / FAN DIAMETER (mm)	500
KAPASİTE / CAPACITY (kW)	63	**NOMİNAL AKIM** / NOMINAL CURRENT	-----	**KAPASİTE** / CAPACITY (kW)	25.15
YÜZEY ALANI / SURFACE AREA (m^2)	153	**BAĞLANTI ÖLÇÜLERİ** / CONNECTION DIMENSIONS (m^2)	7/8-2 1/8	**YÜZEY ALANI** / SURFACE AREA (m^2)	96.72

ÜRÜN / PRODUCT	ECO	PLS
GAZ DEPOSU / GAS RECEIVER	✓	✓
YAĞ AYIRICI / OIL SEPARATOR	✓	✓
LİKİT TUTUCU / LIQUID RECEIVER	✓	✓
MANOMETRE / PRESSURE GAUGE	×	✓
Y.B. SWİTCHİ / HIGH PRESSURE SWITCH	✓	×
KOMBİNE / COMBINATION UNIT	×	✓
GÖZELTME CAMI / SIGHT GLASS	✓	✓
SELENOİD / SOLENOID VALVE	×	✓
TİTREŞİM / VIBRATION ISOLATOR	✓	✓
DRAYER / DRYER	✓	✓
DİJİTAL / DIGITAL	✓	✓
ELEKTRİK PANOSU / ELECTRICAL PANEL	✓	✓
KAPİLER / CAPILLARY TUBE	×	✓

AKIŞ DİYAGRAMI TEMSİLİ GÖRSEL OLARAK KOYULMUŞTUR.
THE FLOW DIAGRAM HAS BEEN PRESENTED AS A REPRESENTATIVE VISUAL.

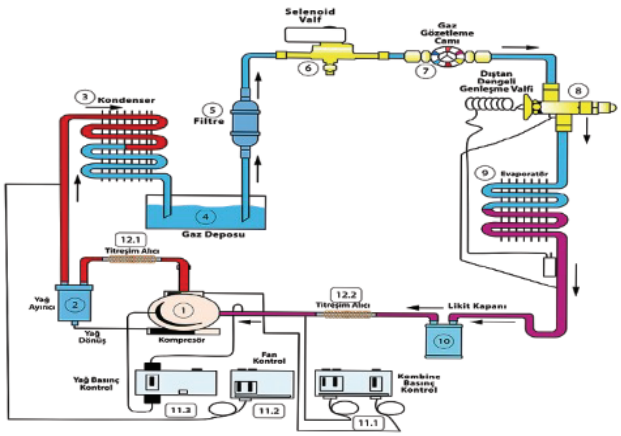

KOMPRESÖR KAPASİTESİ COMPRESSOR CAPACITY	R 404 A				R 449 A			
TO / TC / TO / TC (°C)	-25/+45	-25/+50	-31/+45	-31/+50	-25/+45	-25/+50	-31/+45	-31/+50
SOĞUTMA KAP. / COOLING CAPACITY (kW)	25.70	22.61	----	----	28.10	23.40	----	----
ÇEKİLEN GÜÇ / POWER CONSUMPTION (kW)	18.08	18.56	----	----	14.40	15.35	----	----
COP / COP (w/w)	1.42	1.22	----	----	1.95	1.52	----	----