POLAR ICE COOLING

SNKESTR F 15000 P

SNKES SERİSİ / SNKES SERIES

DIŞ ÜNİTE (KONDENSER) ÖLÇÜLER / OUTDOOR UNIT (CONDENSER) DIMENSIONS							
L	L1	H	H1	W	W1	W2	W3
2180	0	1349	1262	800	783	844	876

İÇ ÜNİTE (EVAPARATÖR) ÖLÇÜLER / INDOOR UNIT (EVAPORATOR) DIMENSIONS							
L	L1	H	H1	W	W1	W2	W3
2300	1980	791	728	621	555	492	441

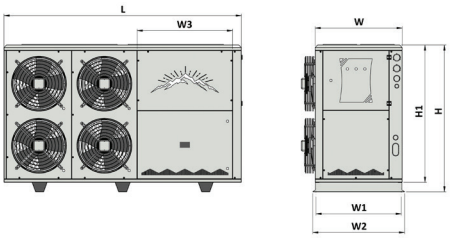

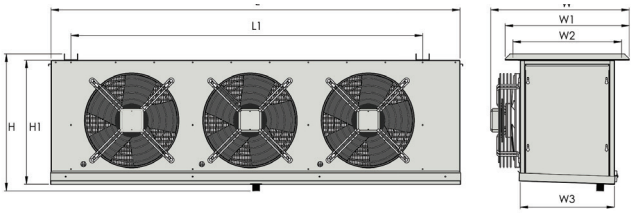

DIŞ ÜNİTE / OUTDOOR UNIT	= 320 KG	**İÇ ÜNİTENİN DRENAJ** / INDOOR UNIT DRAIN Ø = 33 mm	= 135 KG

KOMPRESÖR-KONDENSER-EVAPARATÖR BİLGİLERİ / COMPRESSOR - CONDENSER - EVAPORATOR INFORMATION

DIŞ ÜNİTE (KONDENSER)		KOMPRESÖR / COMPRESSOR		İÇ ÜNİTE (EVAPARATÖR)	
MARKA / BRAND	EWEREST 10-63	**MARKA** / BRAND	FRASCOLD	**MODEL** / MODEL	TEA50 136 6
ADET / QUANTITY	1	**MODEL** / MODEL	S15-52Y	**ADET** / QUANTITY	1
FAN ADET / NUMBER OF FANS	4	**GÜÇ** / POWER	15 HP	**FAN ADET** / NUMBER OF FANS	3
FAN ÇAPI / FAN DIAMETER (mm)	500	**TİPİ** / TYPE	YARI HERMETİK	**FAN ÇAPI** / FAN DIAMETER (mm)	500
KAPASİTE / CAPACITY (kW)	63	**NOMİNAL AKIM** / NOMINAL CURRENT		**KAPASİTE** / CAPACITY (kW)	22.90
YÜZEY ALANI / SURFACE AREA (m^2)	153	**BAĞLANTI ÖLÇÜLERİ** / CONNECTION DIMENSIONS (m^2)	5/8-1 5/8	**YÜZEY ALANI** / SURFACE AREA (m^2)	85,82

ÜRÜN / PRODUCT	ECO	PLS
GAZ DEPOSU / GAS RECEIVER	✓	✓
YAĞ AYIRICI / OIL SEPARATOR	×	×
LİKİT TUTUCU / LIQUID RECEIVER	×	×
MANOMETRE / PRESSURE GAUGE	×	✓
Y.B. SWİTCHİ / HIGH PRESSURE SWITCH	✓	×
KOMBİNE / COMBINATION UNIT	×	✓
GÖZELTME CAMI / SIGHT GLASS	✓	✓
SELENOİD / SOLENOID VALVE	×	✓
TİTREŞİM / VIBRATION ISOLATOR	✓	✓
DRAYER / DRYER	✓	✓
DİJİTAL / DIGITAL	✓	✓
ELEKTRİK PANOSU / ELECTRICAL PANEL	✓	✓
KAPİLER / CAPILLARY TUBE	×	✓

AKIŞ DİYAGRAMI TEMSİLİ GÖRSEL OLARAK KOYULMUŞTUR.
THE FLOW DIAGRAM HAS BEEN PRESENTED AS A REPRESENTATIVE VISUAL.

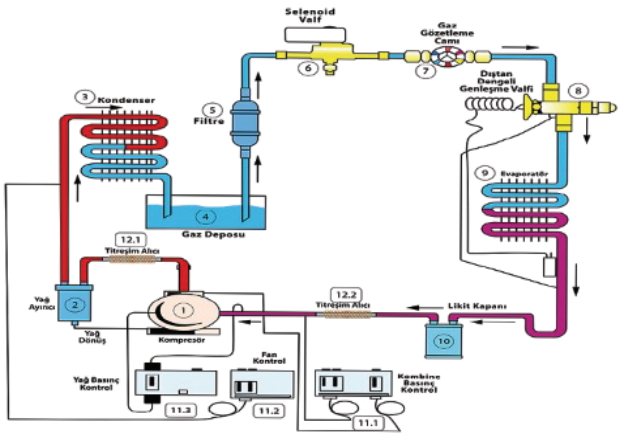

KOMPRESÖR KAPASİTESİ COMPRESSOR CAPACITY	R 404 A				R 449 A			
TO / TC / TO / TC (°C)	0/+45	0/+50	-10/+45	-10/+50	0/+45	0/+50	-10/+45	-10/+50
SOĞUTMA KAP. / COOLING CAPACITY (kW)	38.58	35.00	26.53	24.05	37.30	33.97	23.70	21.39
ÇEKİLEN GÜÇ / POWER CONSUMPTION (kW)	13.61	14.51	11.74	12.31	11.38	11.97	9.78	10.09
COP / COP (w/w)	2.83	2.41	2.26	1.95	3.28	2.84	2.42	2.12